1" W.G.
STATIC
POS. OR NEG.

SHOP STANDARDS
DUCT CONSTRUCTION TABLE
(FOR GALVANIZED & 304 S.S. & 316 S.S. DUCTWORK)
(NOT FOR ALUMINUM)

DUCT SIZE	DUCT GAUGE	JOINT LENGTH	WIDE SIDE CONNECTOR	NARROW SIDE CONNECTOR
0 - 12"	26	59"	FLAT SLIP T-6 24 GA	FLAT DRIVE T-1 24 GA
13 - 18"	26	59"	STANDING SLIP T-11 26 GA	FLAT DRIVE T-1 24 GA
19 - 30"	26	56"	T.D.C. T-25a	T.D.C. T-25a
31 - 42"	24	56"	T.D.C. T-25a	T.D.C. T-25a
43 - 54"	22	56"	T.D.C. T-25a	T.D.C. T-25a
55 - 60"	24	56"	T.D.C. W/ C.T.R. T-25a	T.D.C. W/ C.T.R. T-25a
61 - 72"	22	56"	T.D.C. W/ C.T.R.&J.T.R T-25a	T.D.C. W/ C.T.R.&J.T.R T-25a
73 - 84"	22	56"	T.D.C. W/ 2C.T.R. & J.T.R. T-25a	T.D.C. W/ 2C.T.R. & J.T.R. T-25a
85 - 96"	20	56"	T.D.C. W/ 2C.T.R. & J.T.R. T-25a	T.D.C. W/ 2C.T.R. & J.T.R. T-25a
97 & UP	18	56"	T.D.C. W/ CENTER A.R. & J.T.R. T-25a	T.D.C. W/ CENTER A.R. & J.T.R. T-25a

NOTES:
J.T.R. - JOINT TIE ROD
C.T.R. - CENTER TIE ROD
A.R. ANGLE REINF.
TIE RODS ARE 1/2" EMT
If MPT (Mid-point Tie Rods) are used, the reinforcement spacing is based on 2-1/2'
References:
1. SMACNA-HVAC Duct Construction Standards-Metal and Flexible, Third Edition 2005.

Hamlin sheet metal

2" W.G.
STATIC
POS. OR NEG.

SHOP STANDARDS
DUCT CONSTRUCTION TABLE
(FOR GALVANIZED & 304 S.S. & 316 S.S. DUCTWORK)
(NOT FOR ALUMINUM)

DUCT SIZE	DUCT GAUGE	JOINT LENGTH	WIDE SIDE CONNECTOR	NARROW SIDE CONNECTOR
0 - 10"	26	59"	FLAT SLIP T-6 24 GA	FLAT DRIVE T-1 24 GA
11 - 14"	26	59"	STANDING SLIP T-11 26 GA	FLAT DRIVE T-1 24 GA
15 - 26"	26	56"	T.D.C. T-25a	T.D.C. T-25a
27 - 30"	24	56"	T.D.C. T-25a	T.D.C. T-25a
31 - 36"	22	56"	T.D.C. T-25a	T.D.C. T-25a
37 - 42"	20	56"	T.D.C. T-25a	T.D.C. T-25a
43 -54"	22	56"	T.D.C. W/ C.T.R. T-25a	T.D.C. W/ C.T.R. T-25a
55-60"	22	56"	T.D.C. W/ C.T.R. & J.T.R. T-25a	T.D.C. W/ C.T.R. & J.T.R. T-25a
61 - 72"	22	56"	T.D.C. W/ C.T.R. & J.T.R. T-25a	T.D.C. W/ C.T.R. & J.T.R. T-25a
85 - 96"	20	56"	T.D.C. W/ 2 C.T.R. & J.T.R. T-25a	T.D.C. W/ 2 C.T.R. & J.T.R. T-25a
97 & UP	18	56"	T.D.C. W/ CENTER A.R.. & J.T.R. T-25a	T.D.C. W/ CENTER A.R.. & J.T.R. T-25a

NOTES:
J.T.R. - JOINT TIE ROD
C.T.R. - CENTER TIE ROD
A.R. ANGLE REINF.
TIE RODS ARE 1/2" EMT
If MPT (Mid-point Tie Rods) are used, the reinforcement spacing is based on 2-1/2'
References:
1. SMACNA-HVAC Duct Construction Standards-Metal and Flexible, Third Edition 2005 SMACNA.

3" W.G.
STATIC
POS. OR NEG.

SHOP STANDARDS
DUCT CONSTRUCTION TABLE
(FOR GALVANIZED & 304 S.S. & 316 S.S. DUCTWORK)
(NOT FOR ALUMINUM)

DUCT SIZE	DUCT GAUGE	JOINT LENGTH	WIDE SIDE CONNECTOR	NARROW SIDE CONNECTOR
0 - 12"	26	59"	STANDING SLIP T-11 26 GA	FLAT DRIVE T-1 24 GA
13 - 26"	24	56"	T.D.C. T-25a	T.D.C. T-25a
27 - 30"	22	56"	T.D.C. T-25a	T.D.C. T-25a
31 - 36"	20	56"	T.D.C. T-25a	T.D.C. T-25a
37 - 42"	22	56"	T.D.C. W/ C.T.R. T-25a	T.D.C. W/ C.T.R. T-25a
43 - 54"	22	56"	T.D.C. W/ C.T.R. & J.T.R. T-25a	T.D.C. W/ C.T.R. & J.T.R. T-25a
55-60"	20	56"	T.D.C. W/ C.T.R. & J.T.R. T-25a	T.D.C. W/ C.T.R. & J.T.R. T-25a
61-84"	20	56"	T.D.C. W/ 2 C.T.R & J.T.R T-25a	T.D.C. W/ 2 C.T.R & J.T.R T-25a
85- 96"	18	56"	T.D.C. W/ 2 C.T.R & J.T.R T-25a	T.D.C. W/ 2 C.T.R & J.T.R T-25a
97- 120"	18	56"	T.D.C. W/ CENTER A.R. & J.T.R T-25a	T.D.C. W/ CENTER A.R. & J.T.R T-25a

NOTES:
J.T.R. - JOINT TIE ROD
C.T.R. - CENTER TIE ROD
TIE RODS ARE 1/2" EMT
If MPT (Mid-point Tie Rods) are used, the reinforcement spacing is based on 2-1/2'
References:
1. SMACNA-HVAC Duct Construction Standards-Metal and Flexible, Third Edition 2005.

4" W.G.
STATIC
POS. OR NEG.

SHOP STANDARDS
DUCT CONSTRUCTION TABLE
(FOR GALVANIZED & 304 S.S. & 316 S.S. DUCTWORK)
(NOT FOR ALUMINUM)

DUCT SIZE	DUCT GAUGE	JOINT LENGTH	WIDE SIDE CONNECTOR	NARROW SIDE CONNECTOR
0 - 10"	26	59"	STANDING SLIP T-11 26 GA	FLAT DRIVE T-1 24 GA
11 - 12"	26	59"	T.D.C. T-25a	T.D.C. T-25a
13 - 22"	24	56"	T.D.C. T-25a	T.D.C. T-25a
23 - 28"	22	56"	T.D.C. T-25a	T.D.C. T-25a
29 - 42"	22	56"	T.D.C. W/ C.T.R. & J.T.R. T-25a	T.D.C. W/ C.T.R. & J.T.R. T-25a
43 - 60"	20	56"	T.D.C. W/ C.T.R. & J.T.R. T-25a	T.D.C. W/ C.T.R. & J.T.R. T-25a
61- 72"	20	56"	T.D.C. W/ 2 C.T.R & J.T.R T-25a	T.D.C. W/ 2 C.T.R & J.T.R T-25a
73 -96"	18	56"	T.D.C. W/ 2 C.T.R & J.T.R T-25a	T.D.C. W/ 2 C.T.R & J.T.R T-25a
97 – 120"	18	56"	T.D.C. W/ CENTER A.R & J.T.R T-25a	T.D.C. W/ CENTER A.R & J.T.R T-25a

NOTES:
J.T.R. - JOINT TIE ROD
C.T.R. - CENTER TIE ROD
A.R. ANGLE REINF.
TIE RODS ARE 1/2" EMT
If MPT (Mid-point Tie Rods) are used, the reinforcement spacing is based on 2-1/2'
References:
1. SMACNA-HVAC Duct Construction Standards-Metal and Flexible, Third Edition 2005.

6" W.G.
STATIC
POS. OR NEG.

SHOP STANDARDS
DUCT CONSTRUCTION TABLE
(FOR GALVANIZED & 304 S.S. & 316 S.S. DUCTWORK)
(NOT FOR ALUMINUM)

DUCT SIZE	DUCT GAUGE	JOINT LENGTH	WIDE SIDE CONNECTOR	NARROW SIDE CONNECTOR
0 - 8"	26	59"	STANDING SLIP T-11 26 GA	FLAT DRIVE T-1 24 GA
9 - 12"	24	56"	T.D.C. T-25a	T.D.C. T-25a
13 - 24"	22	56"	T.D.C. T-25a	T.D.C. T-25a
25 - 26"	20	56"	T.D.C. T-25a	T.D.C. T-25a
27 - 30"	22	56"	T.D.C. W/ C.T.R. T-25a	T.D.C. W/ C.T.R. T-25a
31 - 36"	20	56"	T.D.C. W/ C.T.R. T-25a	T.D.C. W/ C.T.R. T-25a
37 - 60"	20	56"	T.D.C. W/ C.T.R. & J.T.R. T-25a	T.D.C. W/ C.T.R. & J.T.R. T-25a
61 - 72"	18	56"	T.D.C. W/ C.T.R & J.T.R T-25a	T.D.C. W/ C.T.R & J.T.R T-25a
73 – 84”	18	56"	T.D.C. W/ 2 C.T.R.&J.T.R. T-25a	T.D.C. W/ 2 C.T.R.&J.T.R. T-25a
85 – 96”	16	56”	T.D.C. W/ 2 C.T.R.&J.T.R. T-25a	T.D.C. W/ 2 C.T.R.&J.T.R. T-25a

NOTES:
J.T.R. - JOINT TIE ROD
C.T.R. - CENTER TIE ROD
A.R. ANGLE REINF.
TIE RODS ARE 1/2" EMT
If MPT (Mid-point Tie Rods) are used, the reinforcement spacing is based on 2-1/2'
References:
1. SMACNA-HVAC Duct Construction Standards-Metal and Flexible, Third Edition 2005 .

10" W.G.
STATIC
POS. OR NEG.

SHOP STANDARDS
DUCT CONSTRUCTION TABLE
(FOR GALVANIZED & 304 S.S. & 316 S.S. DUCTWORK)
(NOT FOR ALUMINUM)

DUCT SIZE	DUCT GAUGE	JOINT LENGTH	WIDE SIDE CONNECTOR	NARROW SIDE CONNECTOR
0 – 8”	24	56”	T.D.C. T-25a	T.D.C. T-25a
9 – 12”	22	56”	T.D.C. T-25a	T.D.C. T-25a
13 – 18”	20	56”	T.D.C. T-25a	T.D.C. T-25a
19 – 26”	22	56”	T.D.C. W/ CENTER A.R. T-25a	T.D.C. W/ CENTER A.R. T-25a
27 – 28”	20	56”	T.D.C. W/ CENTER A.R. T-25a	T.D.C. W/ CENTER A.R. T-25a
29 - 42”	20	56”	T.D.C. W/ CENTER A.R. & J.T.R. T-25a	T.D.C. W/ CENTER A.R. & J.T.R. T-25a
43 - 72”	18	56”	T.D.C. W/ CENTER A.R. & J.T.R. T-25a	T.D.C. W/ CENTER A.R. & J.T.R. T-25a
73 – 84”	16	56”	T.D.C. W/ CENTER A.R. & J.T.R. T-25a	T.D.C. W/ CENTER A.R. & J.T.R. T-25a

NOTES:
J.T.R. - JOINT TIE ROD
C.T.R. - CENTER TIE ROD
TIE RODS ARE 1/2" EMT
If MPT (Mid-point Tie Rods) are used, the reinforcement spacing is based on 2-1/2'
References:
1. SMACNA-HVAC Duct Construction Standards-Metal and Flexible, Third Edition 2005 .

Hamlin sheet metal, inc.

Sheet Metal Fabricators

BEADED DUCT

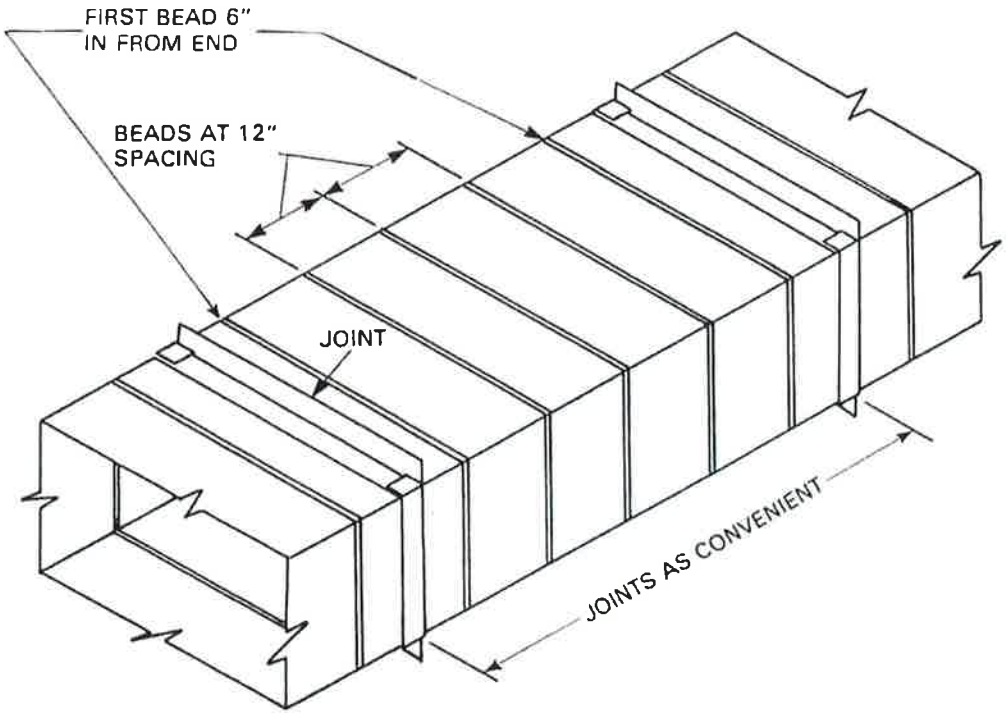

NOTES:

1) Ref: SMACNA-HVAC Duct Construction Standards-Metal and Flexible, Third Edition 2005, page 2.113, figure 2-9.

Hamlin sheet metal, inc.

Sheet Metal Fabricators

LONGITUDINAL SEAMS

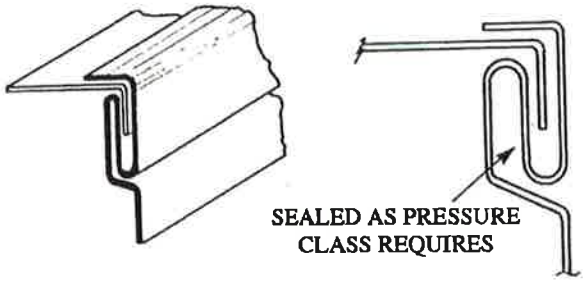

PITTSBURGH LOCK

NOTES:

1) Ref: SMACNA-HVAC Duct Construction Standards-Metal and Flexible, Third Edition 2005, page 21.0, figure 2-2.

Hamlin sheet metal, inc.

Sheet Metal Fabricators

T.D.C. CONNECTORS

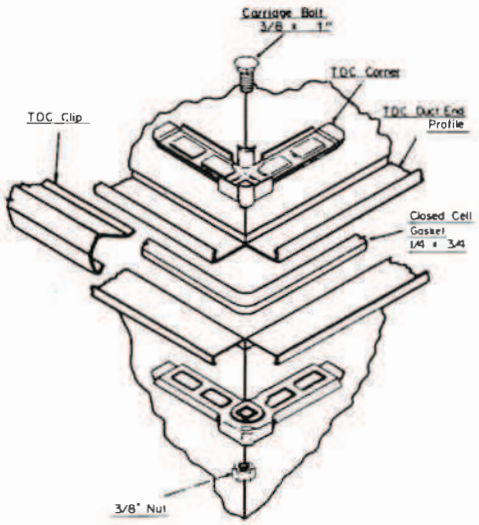

CORNER ASSEMBLY

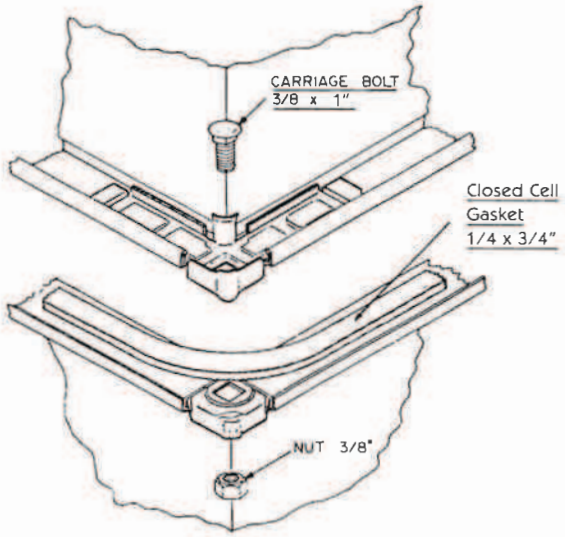

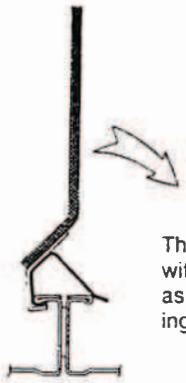

The clamping TDC Clips are installed with 6" wide full coverage TDC Clip tool as shown. For recommended Clip spacing, see Chart

When using TDC in conjunction with slip-on four bolt Connectors, it may be desirable to increase tension on TDC Clip.

To tighten the grip of the TDC Clip to the flange by overbending the long leg of the Clip, use the forming end of the tool as shown at left.

CAUTION: Use of a hammer for installation will damage Clip and may cause leakage.

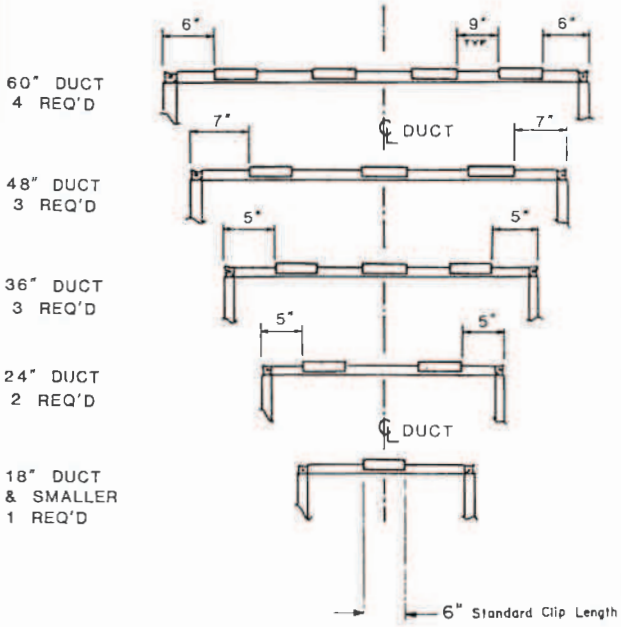

RECOMMENDED CLIP SPACE

Hamlin sheet metal, inc.

Sheet Metal Fabricators

TRANSVERSE CONNECTORS

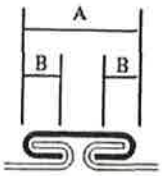

A - 1-1/2"
B - 7/16"

T-1 FLAT DRIVE

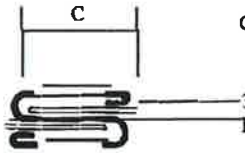

C - 1-1/2

3/16" HEM
INSIDE TYPICAL

T-6 FLAT SLIP

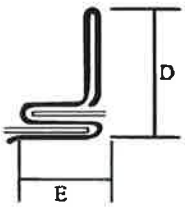

D - 1-1/4"
E - 1-9/16"

T-11 STANDING SLIP

NOTES:

1) Ref: SMACNA-HVAC Duct Construction Standards-Metal and Flexible, Third Edition 2005, page 2.112, figure 2-8.

2) See Duct Construction Tables for limits of application.

Hamlin sheet metal, inc.

Sheet Metal Fabricators

DUCT LINER INSTALLATION

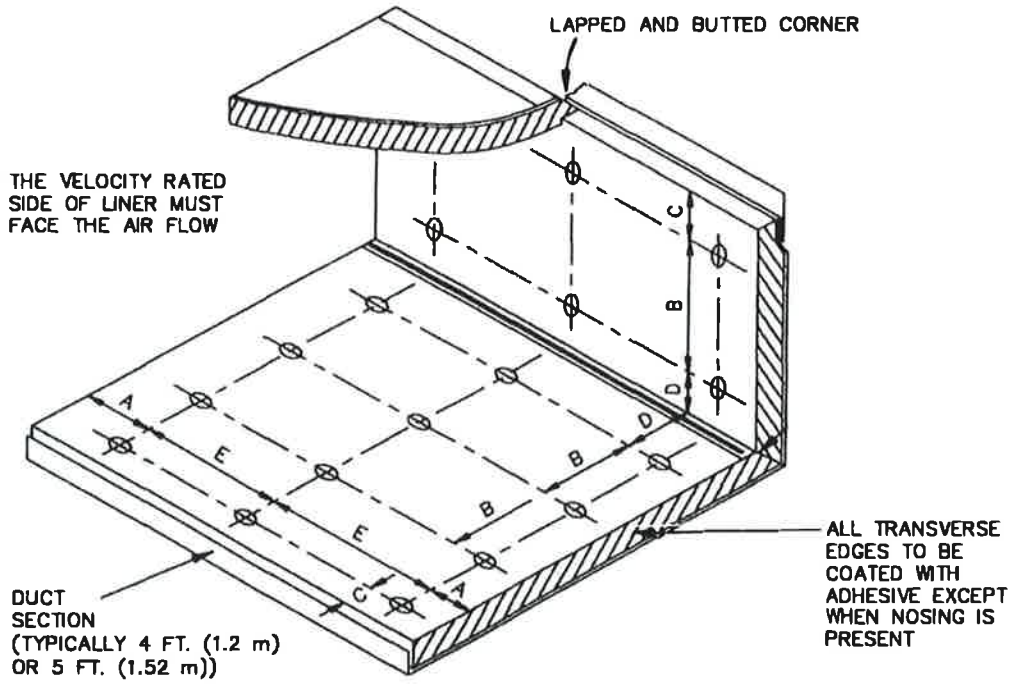

LINEAR FASTENING SCHEDULE					
VELOCITY	DIMENSIONS				
	A	B	C	D	E
0 - 2500 FPM	3"	12"	4"	6"	18"
2501 - 6000 FPM	3"	6"	4"	6"	16"

FASTENERS:

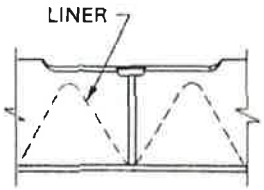

WELDED PIN INTEGRAL HEAD

NOTES:

1) Ref: SMACNA-HVAC Duct Construction Standards-Metal and Flexible, Third Edition 2005, pages 7.13 and 7.17, figure 7-11 and 7-12.

Hamlin sheet metal, inc.

Sheet Metal Fabricators

BRANCH CONNECTIONS

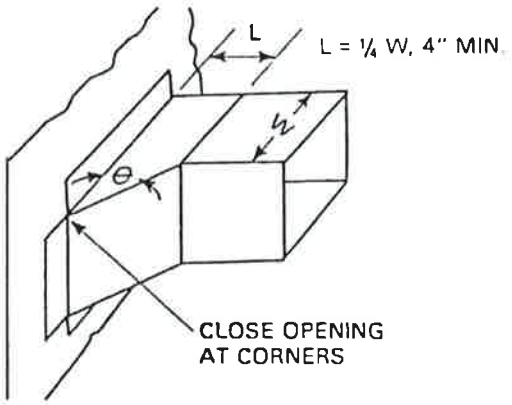

45 DEGREE ENTRY

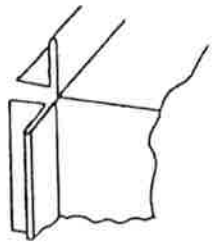

CLINCH LOCK

NOTES:

1) Ref: SMACNA-HVAC Duct Construction Standards-Metal and Flexible, Third Edition 2005, page 4.8, figure 4-6.
2) Extractors to be furnished and installed by erectors where specified

Hamlin sheet metal, inc.

Sheet Metal Fabricators

SINGLE TURNING VANES

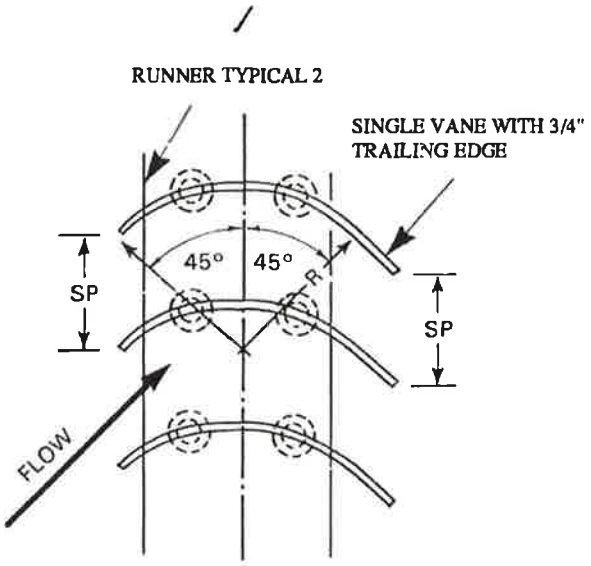

VANE SCHEDULE			
	R	SP.	GA
SMALL	2"	1-1/2"	24
LARGE	4-1/2"	3-1/4"	22

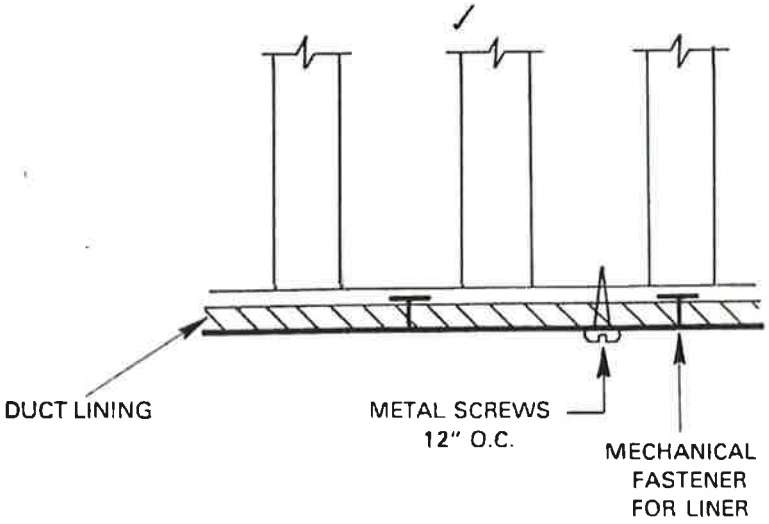

VANE FASTENING DETAIL

NOTES:

1) Ref: SMACNA-HVAC Duct Construction Standards-Metal and Flexible, Third Edition 2005, pages 4.5 and 4.6, figures 4-3 and 4-4.
2) Maximum unsupported vane length is 36".

Hamlin sheet metal, inc.

Sheet Metal Fabricators

AIRFOIL TURNING VANES

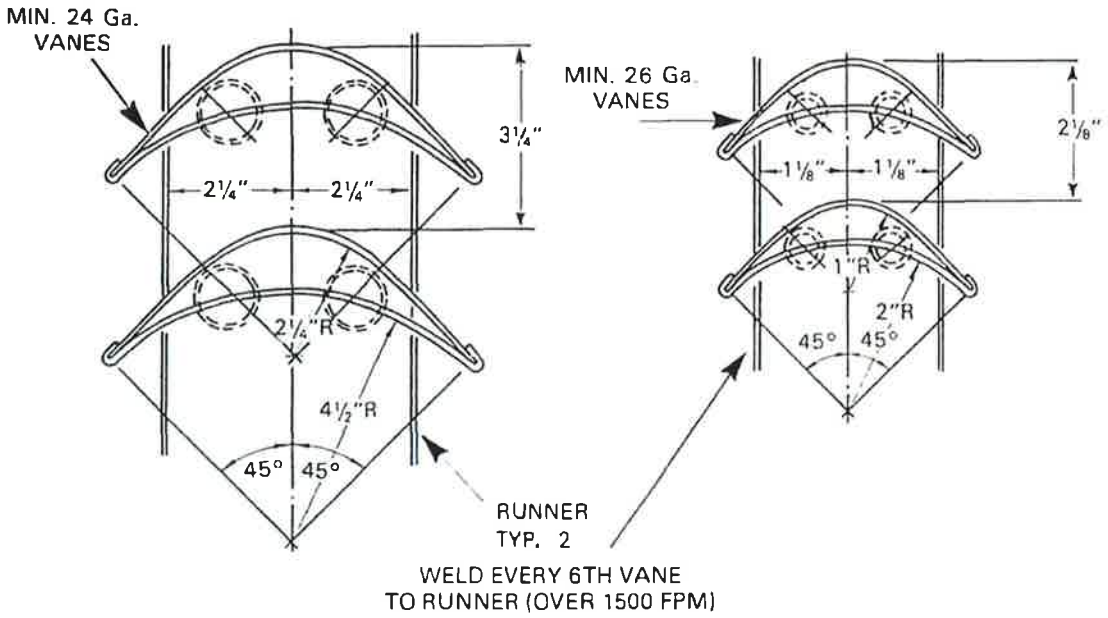

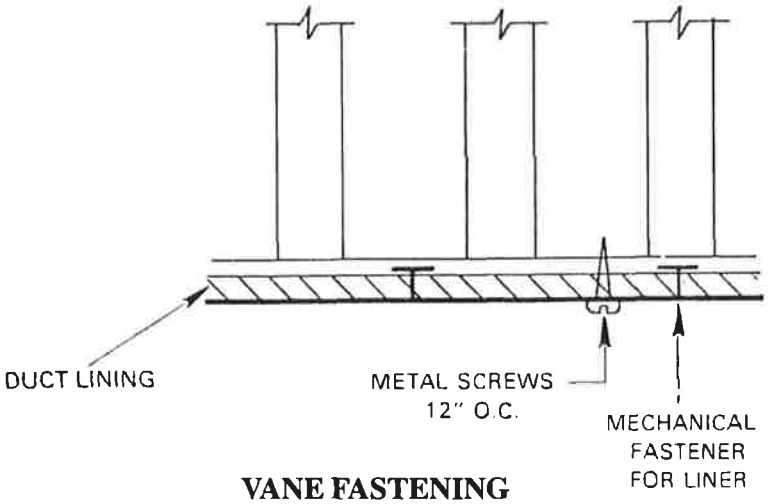

VANE FASTENING DETAIL

NOTES:

1) Ref: SMACNA-HVAC Duct Construction Standards-Metal and Flexible, Third Edition 2005, pages 4.5 and 4.6, figures 4-3 and 4-4.

2) Maximum unsupported small vane length is 48" and large vane length is 72".

HAMLIN SHEET METAL CO., INC.

EASYROD TIE ROD CONSTRUCTION
Use For Shop Fabricated Or Knocked Down Ductwork

A simple, strong component system to make the installation of tie rods faster. Can be used for both positive and negative pressure.

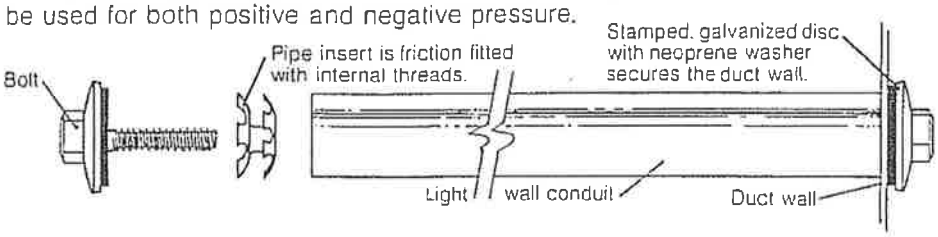

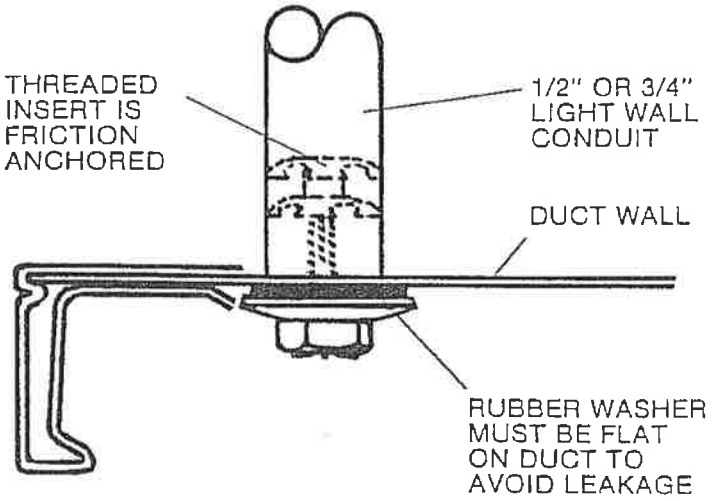

See attached test results dated 8-6-93 for conformance to SMACNA standards and pressure class limitations

Hamlin sheet metal, inc.

Sheet Metal Fabricators

DUCT LINER INSTALLATION

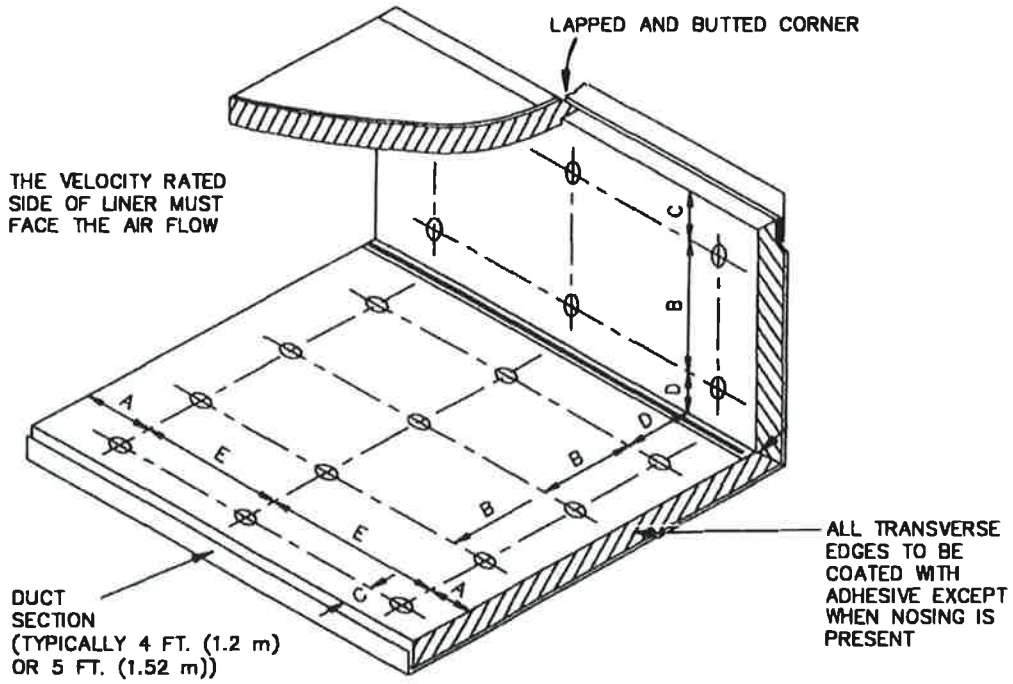

LINEAR FASTENING SCHEDULE					
VELOCITY	DIMENSIONS				
	A	B	C	D	E
0 - 2500 FPM	3"	12"	4"	6"	18"
2501 - 6000 FPM	3"	6"	4"	6"	16"

FASTENERS:

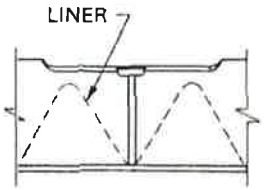

WELDED PIN INTEGRAL HEAD

NOTES:

1) Ref: SMACNA-HVAC Duct Construction Standards-Metal and Flexible, Third Edition 2005, pages 7.13 and 7.17, figure 7-11 and 7-12.

Hamlin sheet metal, inc.

Sheet Metal Fabricators

SINGLE TURNING VANES

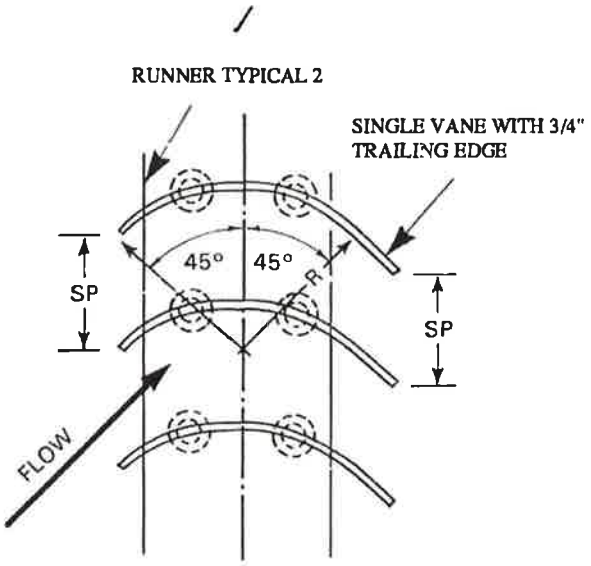

VANE SCHEDULE			
	R	SP.	GA
SMALL	2"	1-1/2"	24
LARGE	4-1/2"	3-1/4"	22

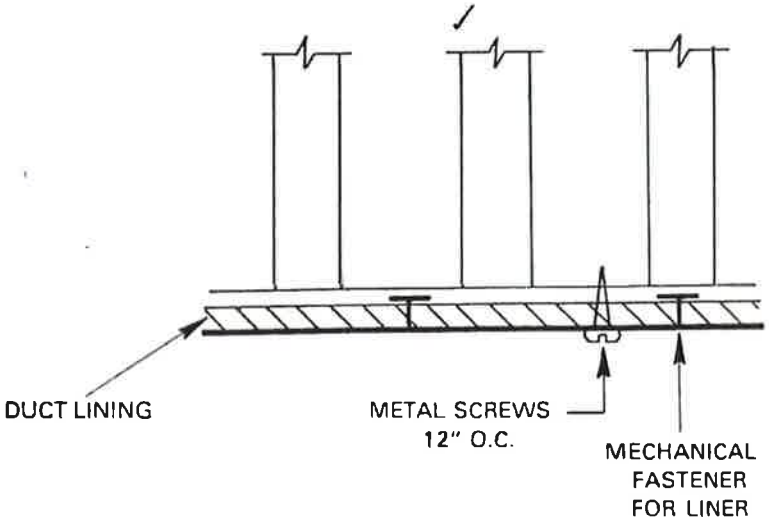

VANE FASTENING DETAIL

NOTES:

1) Ref: SMACNA-HVAC Duct Construction Standards-Metal and Flexible, Third Edition 2005, pages 4.5 and 4.6, figures 4-3 and 4-4.
2) Maximum unsupported vane length is 36".

Hamlin sheet metal, inc.

Sheet Metal Fabricators

AIRFOIL TURNING VANES

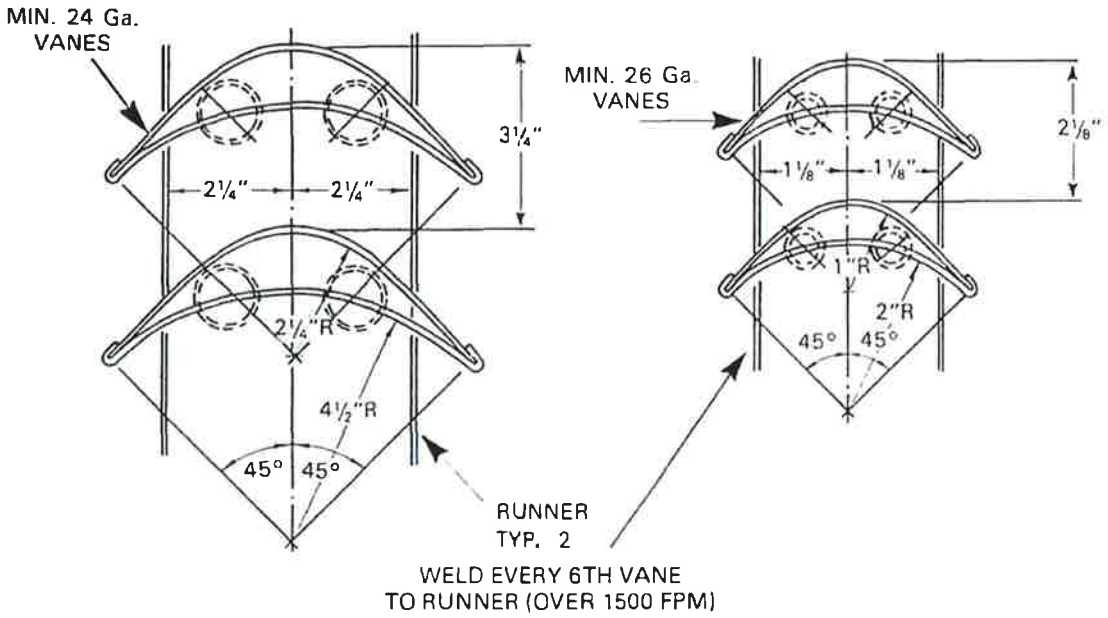

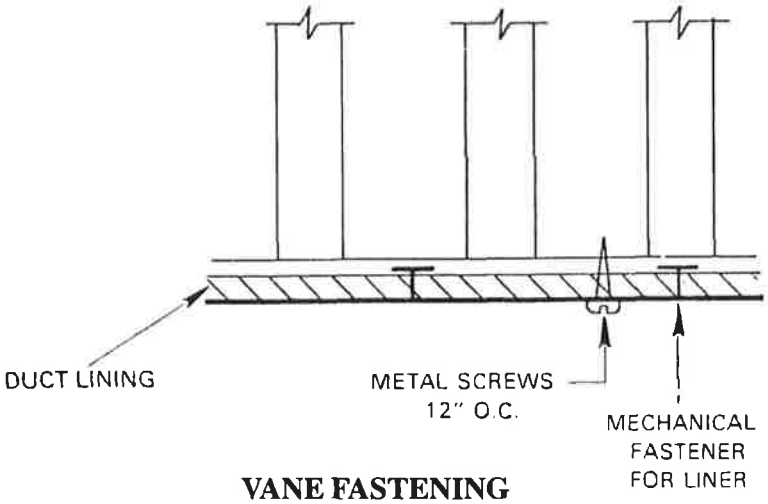

VANE FASTENING DETAIL

NOTES:

1) Ref: SMACNA-HVAC Duct Construction Standards-Metal and Flexible, Third Edition 2005, pages 4.5 and 4.6, figures 4-3 and 4-4.

2) Maximum unsupported small vane length is 48" and large vane length is 72".